DATE	SYM	REVISION	AUTH	DR.	CK.
	A				
	B				
	C				
	D				
	E				

SPEEDOMETER CONNECTOR

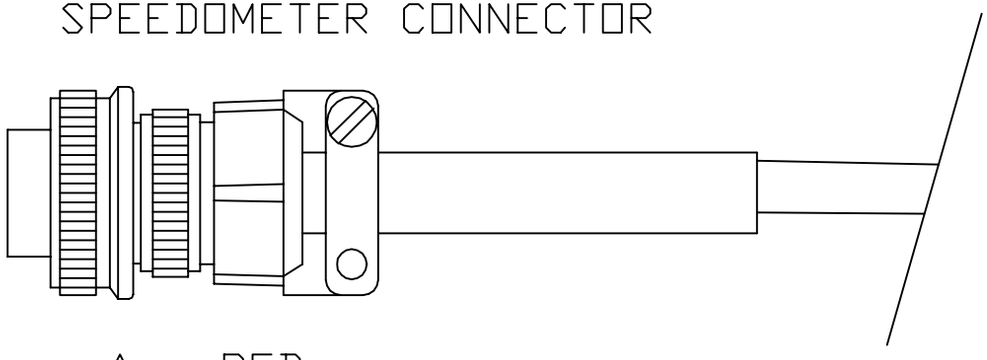

A - RED
B - BLACK
C - GREEN
D - WHITE

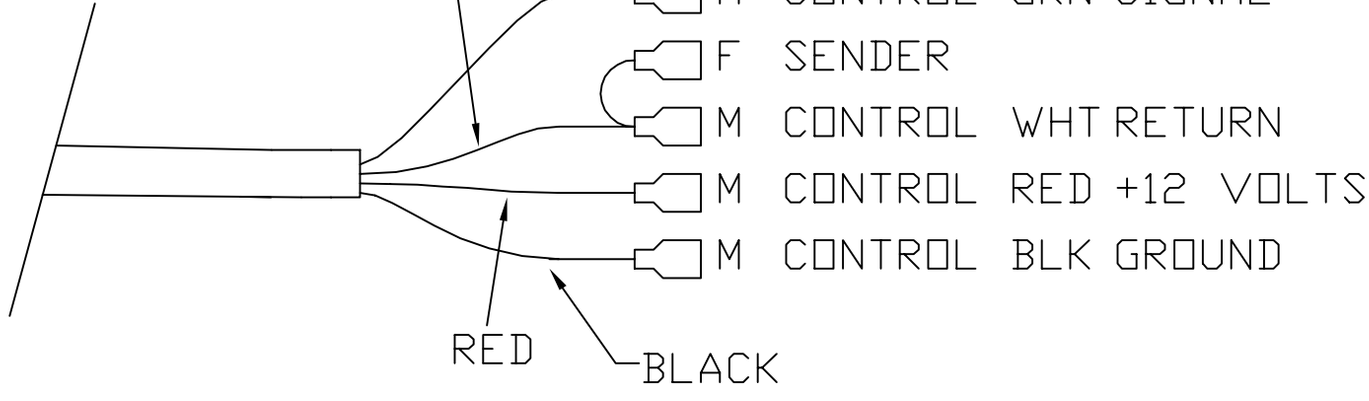

NOTES:
CABLE IS 15 FEET UNLESS OTHER-WISE SPECIFIED

CONNECTOR IS MS-3106A-14S-2S WITH STRAIN RELIEF

TOLERANCES	MICRO SYSTEMS DEVELOPMENT, INC. Dayton, Ohio 45458			
DECIMAL .XX ?.01 .XXX ?.005	MAT'L AND FINISH	SCALE	DRAWN BY J. Butler	
			APPROVED BY	
	TITLE MECHANICAL ASSEMBLY FOR S40 CABLE FOR SKIPLINE APPLICATION			
ANGULAR ?.1 deg	DATE 6/22/94	SIZE A	DRAWING NUMBER 97104	REV. B